PELHAM & WHITE

Model: PWS430

MINIMUM CABINET SIZE:
AT LEAST
36” WIDE

Unpack and inspect your sink upon delivery to avoid costly contractor delays

Product Features

- High quality 16-Gauge 304 stainless steel alloy
- 3 part black finish
- Sound deadening rubber pads and undercoating
- 10mm/0.4” radius corners for easy cleaning
- Includes finish matched stainless steel wire grid
- Includes finish matched stainless steel strainer drain

This sink is intended only for under-counter installations of solid-surface composite or natural stone countertops. It should never be installed in laminated countertops. Thus, specialized tools are required. It is highly recommended that this product be installed by professionals.

Observe all applicable plumbing codes in your municipality
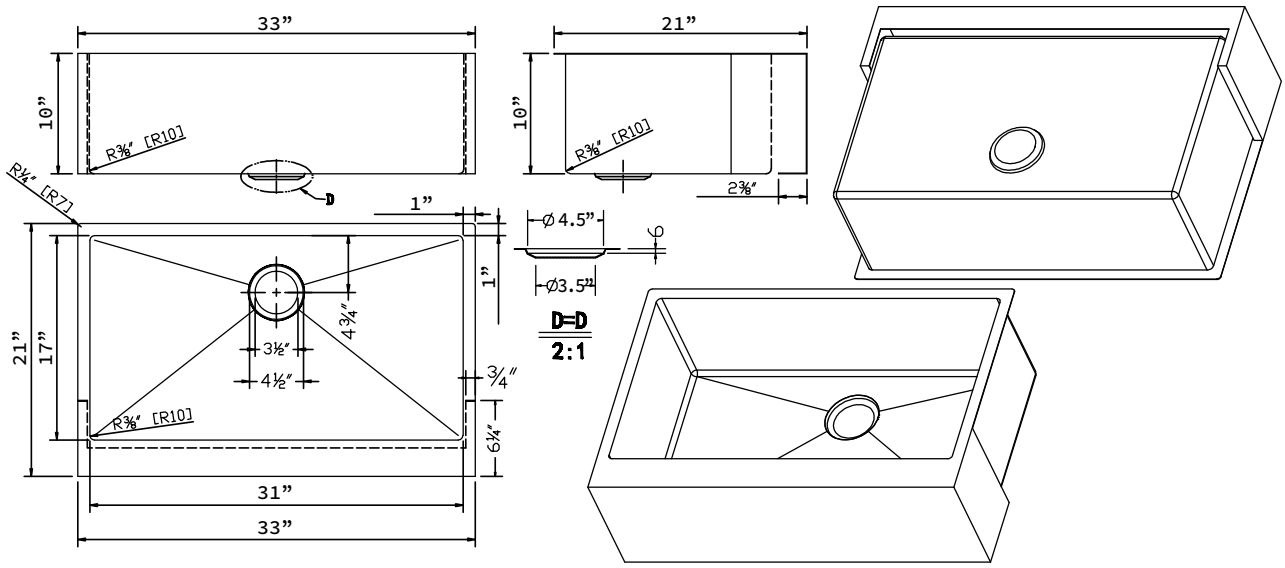
Rough-In Dimensions